Gas Processing Journal

Vol. 6, No. 1, 2018, pp. 72-84
http://gpj.ui.ac.ir
DOI: http://dx.doi.org/10.22108/gpj.2018.112320.1037

Effect of Geometrical Parameters on the Flow Pattern and Performance of Gas-Particle Separators: A Numerical Study

Mehdi Miansari [1*], Ghasem Najarian Darounkolaie [2], Behnam Amini [3]

[1,2,3] *Department of Mechanical engineering, Qaemshahr Branch, Islamic Azad University, Qaemshahr, Iran*

Received: 2018-08-01 Revised: 2018-09-06 Accepted: 2018-09-26

Abstract: Air and gas pollution has become a critical problem endangering species life worldwide. Among all technologies proposed to solve this problem, separators including cyclones have attracted tremendous attention towards separation of airborne and solid particles from air and gases due to their simplicity of construction, low operating costs and flexibility in tolerating hard conditions. In this study, a numerical investigation of solid particle separation in gas-particle cyclones is presented. The Reynolds stress turbulence model (RSM) is employed to simulate a strongly swirling turbulent air flow along with the discrete phase model (DPM) to trace the particles. A wide range of geometrical parameters is studied to find out how they affect the flow field pattern and particle separation in cyclones, hence the cyclone performance. It is shown that the pressure drop and the tangential velocity decrease with inlet angle increment. In addition, the static pressure increases due to a small diameter reduction originating from the reduction in cone angle. The static pressure is significantly reduced in the cyclone with higher cone height when the axial velocity changes are not noticeable. This parametric study developed based on a numerical model, can have a great potential for design and fabrication of cyclones used in gas-solid separation industries.

Keywords: Gas cyclone, tangential velocity, axialvelocity, numerical study, cyclone geometry

1. Introduction

Cyclones are widely used in the industry to control air pollution and to separate solid particles from gas. Simplicity of construction, low operating costs and flexibility in tolerating hard conditions have made cyclones one of the most important solid-gas separation equipment [1]. In these devices, the tangential inlet creates vortex flow and consequently a centrifugal force exerts to the particles, causing the particles to approach the walls. The particles close to the walls are separated from the flow due to the downward movement of the gas as well as the gravitational force and are collected at the end of the conic section of the cyclone. The clean gas leaves the cyclone through the upper outlet tube (vortex finder) [2]. Although the cyclones have a simple geometry, studies have shown that the swirling flow generated in these systems is a complicated phenomenon based on which many theoretical and experimental works have been performed in cyclones. In recent decades, many studies have been conducted on the simulation of turbulent flow and various multiphase models inside the cyclones.

Demir et al. (2016) examined the effect of cone and cylinder heights on velocity and pressure fields in cyclones [3]. Song et al. (2016) numerically studied the forces exerted on particles entering the cyclone separators. They used RSM model to simulate the turbulent gas flow [4]. Souza et al. (2015) studied the effects of the shape and length of the gas outlet duct on the performance of the cyclone separators using LES with dynamic sub-grid turbulent model [5]. Duan et al. (2015) analyzed the entropy generation incyclone separator with different inlet dimensions [6]. El-Batsh et al. (2013) reported an improved cyclone performance by optimizing the dimensions of the gas outlet tube [7]. Khairy and Chris (2011) further

*Corresponding Author.
Authors' Email Address: [1] **M. Miansari** (m.miansari@qaemiau.ac.ir), [2]**Gh. Najarian Darounkolaie** (ghasemsotodeh@yahoo.com), **B. Amini** (behnam.amini.a@gmail.com)
ISSN (Online): 2345-4172, **ISSN (Print):** 2322-3251 **© 2018 University of Isfahan. All rights reserved**

studied the geometry effect of the dust exhaust on the performance of gas cyclones [8].

Sue et al. (2011) numerically studied the effects of the inlet configuration in a square cyclone separator. They used the RSM model and a Lagrangian equation to simulate the gas turbulent flow and the particle motion, respectively. The results showed that the inlet configuration affects the turbulence dynamics inside the cyclone [9]. Khairy and Chris (2012) investigated the effect of vortex finder dimensions on flow patterns and cyclone performance using the LES model. The results showed that 40 percent decrease in diameter of the vortex finder resulted in a 175% increase in the dimensionless pressure drop (Euler number) and 50% reduction in the Stokes number. Furthermore, doubling the vortex finder length led to 25 percent increase in both Euler number and Stokes number [10]. Khairy and Chris (2013) also examined the effect of cyclone inlet on its performance and flow pattern. They used five cyclone separators with turbulence model (RSM) and the DPM model for particle tracking. The results showed that the maximum tangential velocity in the cyclone decreases with increasing both the height and the width of the cyclone inlet and no acceleration occurs in the cyclone domain [11].

Kaya et al. (2011) studied the effect of surface hardness and roughness on the performance of a cyclone separator with tangential inlet using the RSM turbulence model and the Lagrangian model for the particle motion. The results of this study showed that increasing the inlet velocity of gas increases the separation efficiency and pressure drop [12]. Shkla et al. (2011) numerically evaluated designs for discrete phase modeling in cyclone separators. Analyses of the results showed that higher order discretization have satisfactory performance for discrete particle simulations [13]. Kheiri and Chris (2011) examined the effect of the diameter of the cone tip on the flow and cyclone performance with the help of mathematical and computational models. As the tip diameter of the cone decreases, the maximum tangential velocity increases slightly while its position is approximately the same [14]. The effect of cyclone size on its operating parameters was also studied by Azadi et al. (2010) studied. The results showed that the diameter of the cutting and pressure drop increased with increasing cyclone size [15].

Qian et al. (2009) investigated the effect of the angle of the inlet section on the separation performance of a cyclone separator. They numerically examined the different angles of the inlet section. The separation efficiency increased with the angles of the inlet section. The separation efficiency increased sharply for the case with inlet section at 45 degrees [16]. Raufi et al. (2008) investigated the effects of diameter and shape of the vortex finders on the performance and cyclone flow field. The results showed that by decreasing the divergence angle of the vortex finder, the low-pressure region extends in the middle of the cyclone and the particles are trapped and transmitted through the vortex to the outlet and therefore the efficiency of the system decreases [17]. Yashido et al. (2013) examined the shape of the conical tip of the gas cyclone on the particle separation performance both experimentally and numerically. The results showed that the optimum angle of the cone tip is 70 degrees under the low velocity conditions [18].

Jiao et al. (2006) numerically modeled the gas flow and separation efficiency in conventional single inlet (SI) and spiral double inlet (DI) cyclones [19]. They found that the new type of cyclone separator with dual spiral inlet improves the gas flow pattern and increases the particle separation efficiency. Jiao et al. (2008) examined the effect of using a rotating blade in a cyclone both numerically and experimentally [20]. The results showed that the tangential velocity distribution in the region near the blade is affected by the speed of the blade and in the external vortex region under the influence of the inlet velocity. Kim et al. (2001) conducted a study for the first time on cyclones with modified body surfaces. They created grooves in different directions on the body surfaces of these cyclones. They first studied the effect of different velocities on different inlet angles on cyclone performance and separation efficiency. Then, the changes in the angles of the cone due to the changes in its small diameter (in three different modes) and its height change (In two different modes) were thoroughly investigated [21].

Although many researchers have studied cyclone separators, they have not yet been systematically explored in gas-particle separation industry. In present study we perform a parametric and comprehensive study of these types of cyclones considering several influential parameters such as, inlet velocity, inlet angles, cone angle and the height of the cone, and their effects on the static pressure, axial velocity, tangential velocity inside the cyclone and eventually on its performance and separation efficiency.

2. Numerical Method

To model the cyclone rotational flow, there are a number of turbulence models in Ansys Fluent software. Standard K-ε, RNG k-ε and Realizable k-ε models were not optimized for cyclone separator for intense rotational flow. In the RSM model, the transfer equations for each Reynolds stress component are calculated and this results in accurate prediction of the rotational flow pattern, linear velocity, tangential velocity, and pressure drop calculation. In our simulation, RSM model was thus used to predict the gas flow behavior [22].

2.1. Governing Equations

In this section, first, the governing equations for the continuous phase and then the governing equations for the discrete phase are investigated.

The continuity and momentum equations for an incompressible fluid are as follows:

$$\frac{\partial \bar{u}_i}{\partial x_i} = 0, \tag{1}$$

$$\frac{\partial \bar{u}_i}{\partial t} + \bar{u}_j \frac{\partial \bar{u}_i}{\partial x_j} = -\frac{1}{\rho}\frac{\partial \bar{P}}{\partial x_i} + \vartheta \frac{\partial^2 \bar{u}_i}{\partial x_j \partial x_j} - \frac{\partial}{\partial x_j} R_{ij} \tag{2}$$

Here $\bar{u}_i$ is the time-averaged velocity component, x_i is the coordinate system, $\bar{P}$ is the time-averaged pressure, ρ is the gas density, ϑ is the kinematic viscosity, and $R_{ij} = \overline{\acute{u}_i \acute{u}_j}$ is the Reynolds stress tensor. Also, $\acute{u}_i = u_i - \bar{u}_i$ is the component of the fluctuating velocity in the i direction [22].

The RSM model provides differential transport equations for evaluating the turbulence stress components:

$$\begin{aligned} &\frac{\partial}{\partial t} R_{ij} + \bar{u}_k \frac{\partial}{\partial x_k} R_{ij} = \frac{\partial}{\partial x_k}\left(\frac{\vartheta_t}{\sigma^k}\frac{\partial}{\partial x_k} R_{ij}\right) \\ &- \left[R_{ik}\frac{\partial \bar{u}_j}{\partial x_k} + R_{jK}\frac{\partial \bar{u}_i}{\partial x_k}\right] \\ &- C_1 \frac{\varepsilon}{k}\left[R_{ij} - \frac{2}{3}\delta_{ij} k\right] \\ &- C_2\left[P_{ij} - \frac{2}{3}\delta_{ij} P\right] - \frac{2}{3}\delta_{ij}\varepsilon \end{aligned} \tag{3}$$

Turbulence generation terms P_{ij} are defined as:

$$\begin{aligned} &P_{ij} = -\left[R_{iK}\frac{\partial \bar{u}_j}{\partial x_k} + R_{jK}\frac{\partial \bar{u}_i}{\partial x_k}\right], \\ &P = P_{ij}\frac{1}{2} \end{aligned} \tag{4}$$

P is the fluctuating kinetic energy, ϑ_t is the turbulence flow viscosity and $\sigma^k = 1$, $C_1 = 1.8$ and $C_2 = 0.6$ are the experimental constants. The transfer equation for turbulence dissipation rate is given as follows:

$$\begin{aligned} &\frac{\partial \varepsilon}{\partial t} + \bar{u}_j \frac{\partial \varepsilon}{\partial x_j} = \frac{\partial}{\partial x_j}\left[\left(\vartheta + \frac{\vartheta_t}{\sigma^\varepsilon}\right)\frac{\partial \varepsilon}{\partial x_j}\right] \\ &- C^{\varepsilon 1}\frac{\varepsilon}{K} R_{ij}\frac{\partial \bar{u}_i}{\partial x_j} - C^{\varepsilon 2}\frac{\varepsilon^2}{K} \end{aligned} \tag{5}$$

Here, $K = \frac{1}{2}\overline{\acute{u}_i \acute{u}_j}$ is the turbulent kinetic energy and $\varepsilon$is the turbulence flow dissipation rate. Also, the constants are as follows [22]:

$$\sigma^\varepsilon = 1.3\ ,\ C^{\varepsilon 1} = 1.44 \text{ and } C^{\varepsilon 2} = 1.92 \tag{6}$$

2.1.1. Discrete Phase Model

The Lagrangian discrete phase model in Fluent follows the Eulerian-Lagrangian approach. The fluid phase is continuous as a continuous phase by solving the Navier-Stokes equations, while the discrete phase is calculated as the distribution of a large number of particles in the continuous phase. The volumetric fraction of particle is small, then it can be assumed that the presence of particles does not affect the flow field and one way coupling can be used [22].

In the Eulerian-Lagrangian method, particle behavior is described by the following equation:

$$\frac{du_p}{dt} = \frac{18\mu}{\rho_p d_p^2}\frac{C_d Re_p}{24}(u_i - u_{pi}) + g_i\frac{(\rho_p - \rho)}{\rho_p} \tag{7}$$

$$\frac{dx_{pi}}{dt} = u_{pi} \tag{8}$$

In equation (7), the first term on the right hand side is the drag force per unit mass of each particle and second term is buoyancy force. Also, ρ and μ are the density and viscosity of the gas, respectively. ρ_p and d_p are the particle density and diameter, respectively. C_d is the drag coefficient, u_i and u_{pi} are the gas velocity and the particle velocity in i direction, and Re_p is the particle Reynolds number [22].

$$Re_p = \frac{\rho_p d_p (u - u_p)}{\mu} \tag{9}$$

The drag coefficient is given by,

$$C_D = a_1 + \frac{a_2}{Re} + \frac{a_3}{Re^2} \tag{10}$$

In the above equation, a_1, a_2 and a_3 are constant coefficients for spherical particles that are functions of Reynolds number [25]. In this study, fluid properties are constant. The flow is transient and incompressible, two-phase and turbulent. Also, cyclone separator surfaces are considered to be smooth.

2.2. Cyclone Geometry and Boundary Conditions

Three-dimensional simulation of cyclone was investigated to evaluate the effect of different parameters on cyclone performance. In Figure 1, an overview of the cyclone is shown and in Table 1, the geometrical dimensions are

presented. It should be noted that the inlet section is located at the distance L_i = D from the cyclone center, and the outer part length of the vortex finder is equal to Le =0.5D, and $d_o$and H refers to the small diameter of the cone and the height of the cyclone, respectively, which will be changed in different cases in this study. The angles of the cone will be changed with change in its small diameter.

In this study, due to the fluid incompressibility, a uniform velocity with magnitude of 8.8 and 16m/s was used for the inlet fluid in different cases. The outlet pressure was considered to be the atmospheric pressure, and the rest of the boundary conditions were considered as wall along with taking into account the no-slip boundary condition.

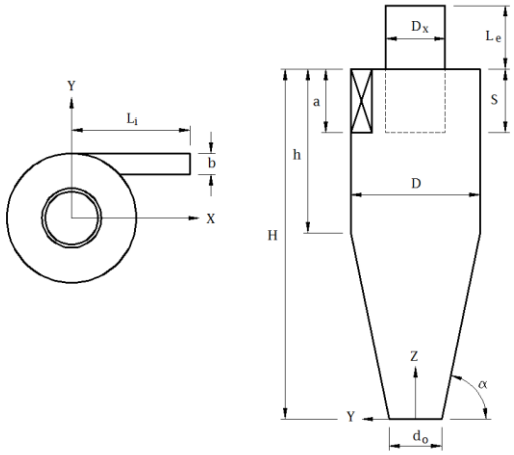

Figure 1. The geometry of cyclone

Table 1. The geometrical dimenions of the cyclone

The name of Parameter	(mm)
Diameter of outlet (D_x)	15.5
Diameter of Cyclone (D)	31
Height (h)	46.5
Inlet height (a)	15.5
Inlet width (b)	8.1375

The working fluid wasair with density of $1\,kg/m^3$and viscosity of $2.11 \times 10^{-5} kg/m.s$. The discrete phase density was860 kg/m^3 and the diameter of the particles wasin the range of 0.025-9μm. In the discrete phase, the trap boundary condition was used for the particle outlet. The escape boundary condition was used for the gas inlet and outlet surfaces and for the rest of the surfacesreflect condition was applied. Here the volumetric fraction of particles is small so that the one-way coupling method was used in simulation, and the injection of particles was only done in one time interval (at a time interval of 0.001 seconds) and once in the inlet with the velocity equal to gas flow velocity.

Due to the fact that the flow inside the cyclone is a highly swirling unsteady turbulent flow, the time step should be a small fraction of the resident time (t_{res}) given as,

$$t_{res} = \frac{V_{cyc}}{Q_{in}} \tag{11}$$

The residence time depends on the cyclone volume (V_{cyc}) and the gas volumetric flow rate (Q_{in}). In the present study the resident time is typically 0.07 s, and the time step used in the simulations is 0.001 s.

For the velocity-pressure coupling, the SIMPLEC method was used. Furthermore, PRESTO scheme and QUICK method were used for pressure term and momentum equation, respectively. Turbulence kinetic energy and dissipations were in second order upwind form and the Reynolds stresses were done using First order upwind.

2.3. Grid Independence Study

Hexagonal mesh was used to increase the accuracy of the problem and convergence (Figure3). Also, in order to ensure the grid independency, the tangential velocity and static pressure at the axial position of Z = 0.05425 from the end of the cyclone and X = 0 were investigated using 4 different grid numbers. As it can be seen, the case with 503000 grids provides the satisfactory grid independency (Figure 4).The Y+ value is a non-dimensional distance (based on local cell fluid velocity) from the wall to the first mesh node and it should be less than 10. In this study Y+ is in the range of 2 to 8 (Figure 2).

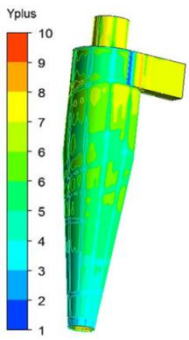

Figure 2. The Value of Y+ on the cyclone wall

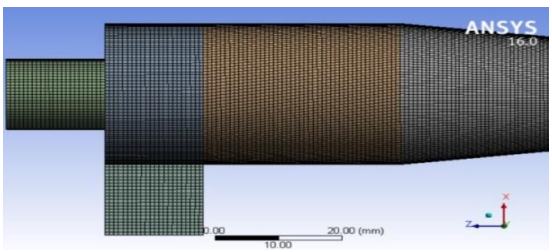

Figure 3. The computational mesh

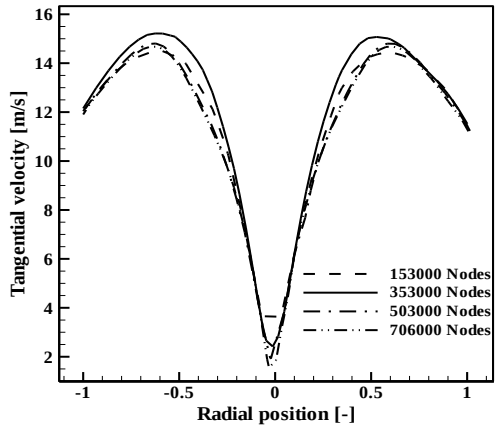

(a)

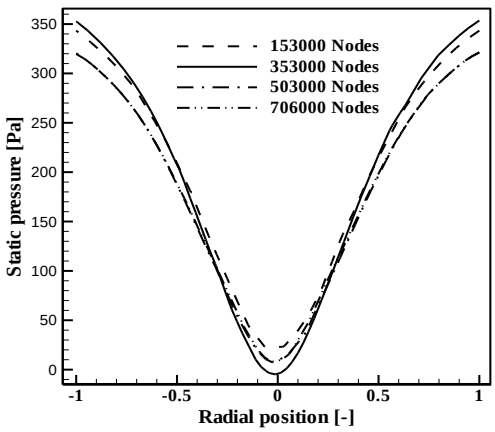

(b)

Figure 4. Different grids used for grid independency study (a): tangential velocity, (b): static pressure

2.4. Validation

Parameters such as axial velocity, tangential velocity and particle collecting efficiency were considered as our validation criteria. Changes in these parameters are shown in Figure 5 with respect to the radial position. As expected, the inverted W behavior was observed for the axial velocity. In the case of tangential velocity, it should be noted that the minimum value in the near-center position is greater than that of reported by Kheiri et al. [8]. Our result showed lower collection efficiency for particles of medium diameter (Figure 5 c) compared to the result of Kheiri et al [8]. The reason for these small differences may stem from the difference in the computational grids used for these two studies.

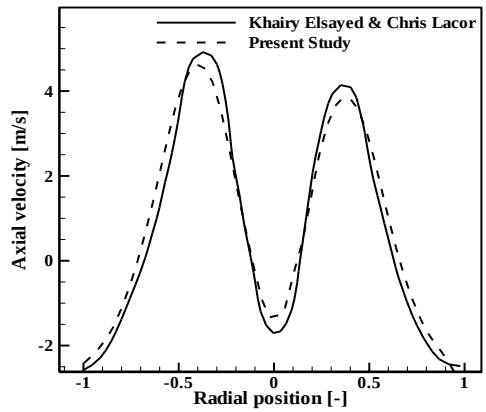

(a)

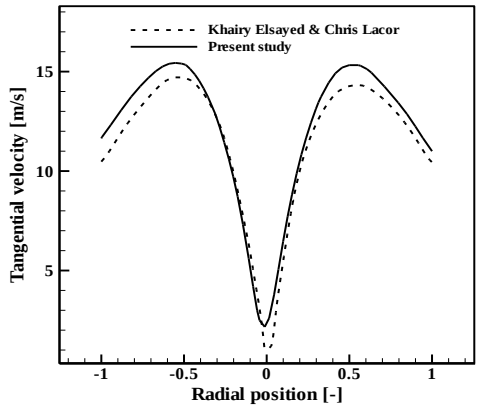

(b)

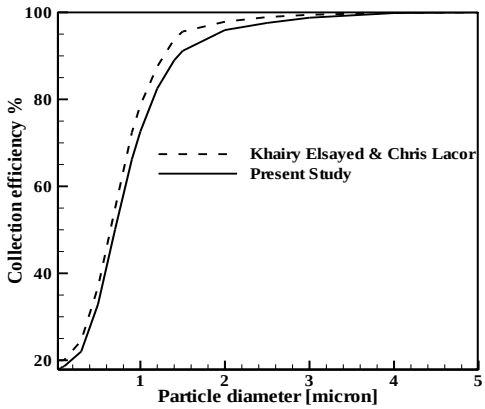

(c)

Figure 5. The comparison of results obtained from the present numerical study and the experimental results [8],

(a): axial velocity (b): tangential velocity
(c): Collection efficiency.

3. Result and Discussion

3. 1. The Effect of Inlet Velocity and Inlet Angle

The effect of different inlet velocities (8.8 and 16 m/s) on the performance of cyclones with different inlet angles (0, 10 and 20 degrees)

was investigated. Figure 5 shows the cyclone geometry in three inlet cases: 0, 10 and 20 degrees. It should be noted that the height (H) and small diameter of the cone (d_0) were 124 and 11.625 mm, respectively.

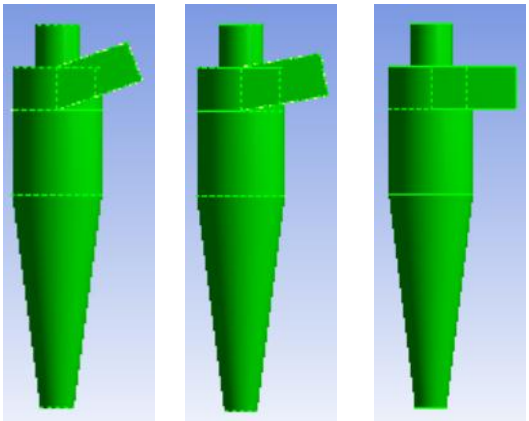

(a): 20 degrees (b): 10 degrees (c): 0 degrees

Figure 6. Cyclone geometry with different inletangles

One of the important parameters in cyclones is tangential velocity. The tangential velocity distribution is very similar to the dynamic pressure distribution. Therefore, the tangential velocity is the velocity at which the cyclone is controlled, the value of which is zero in the center of the cyclone and the walls. The velocity of the inlet fluid is initially increased and it decreases with the rotation along the wall downward. Before the fluid goes lower than the outlet, it hits the fluid that moves from upward from the bottom and creates a vortex. This phenomenon results in a sharp decrease in the energy of the fluid, leading to a secondary rotation, which can ultimately lead to a severe pressure drop in the cyclone. As shown in Figure7, with increasing in inlet angel, the maximum tangential velocity decrease while this changeswas not significant in the center of cyclone. Furthermore, the maximum tangential velocity increasedbyincreasing the inlet velocity from 8 to 16m/s.

Pressure variations in the cyclone center also showed the same behavior for the two inlet velocities (Figure8).

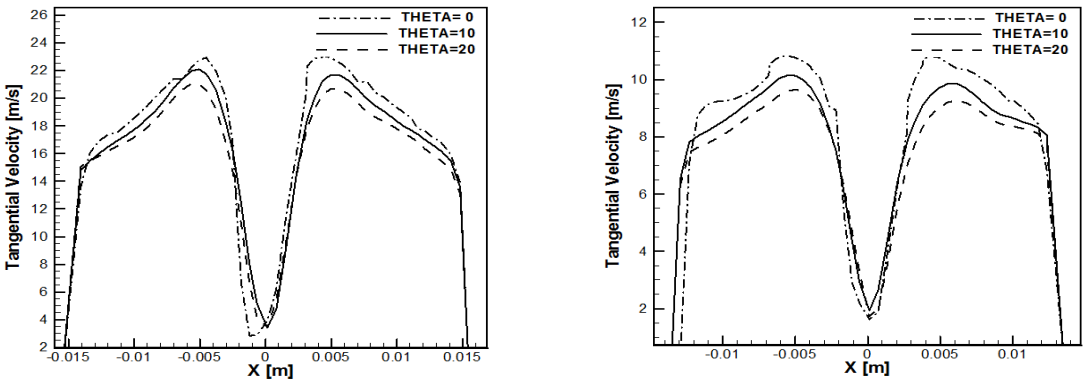

a)V=16m/s b)V=8.8 m/s

Figure 7. The effect of cyclone inlet angel on tangential velocity at different inlet velocity

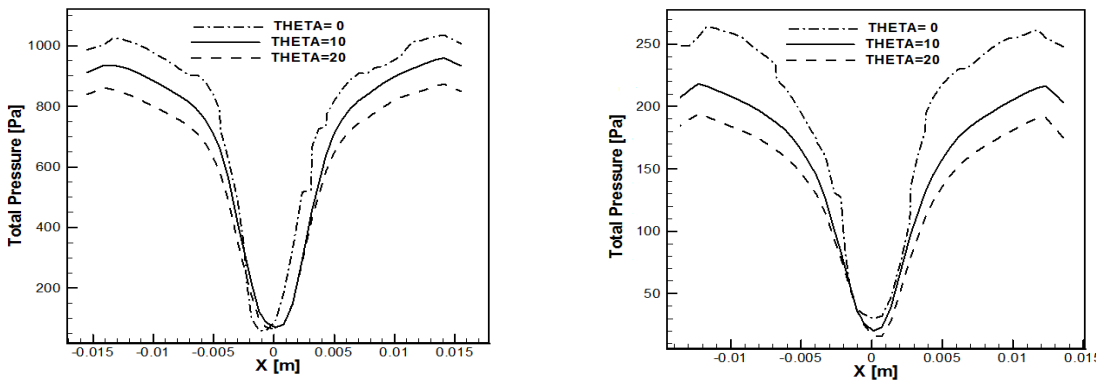

a)V=16 b)V=8.8

Figure 8. The effect of cyclone inlet angel on the total pressure at different inlet velocity

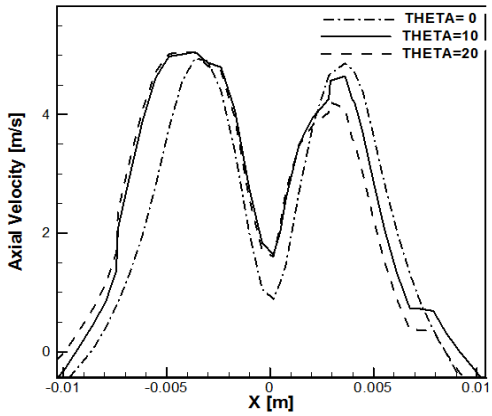

Figure 9. The effect of angle of cyclone inlet on the axial velocity (V=8.8 m/s)

Approaching the center of the cyclone, the pressure reduced and reached its minimum level and then increases by approacing the wall. At higher inlet angles, the cyclone generally experiences lower pressure levels. According to higher inlet velocity of 16 m/s in comparison to 8.8 m/s, the generated pressure drop was also higher in velocity of 16 m/s. The axial velocity of the cyclones is the same as inverted W. By reducing the angle of the cyclone inlet, the axial velocity was first decreased and then increased (Figure 9).

One of the important variables to determine the performance of a cyclone is the particle separation (collection) efficiency. For this purpose, a large number of particles are injected into the cyclone inlet and their behavior was traced while passing the cyclone. The calculation of the efficiency or sedimentation percentage is defined as follows:

$$\eta = \frac{N_{trap}}{N_{insert} - N_{incompelet}} \tag{12}$$

In this relation, N_{trap} is the trapped (sedimented) particles, N_{insert} is the abandoned particles and $N_{incompelet}$is for the rest of the particles.

Figures 10 and 11 show the injection of particles as well as their trajectories for the inlet angles of 0 and 20, respectively. Due to the tangential velocity and centrifugal force on the inlet particles, the particles move downward and approach the cyclone body and impact the body. This impaction due to the inertia of the particles and change in the fluid direction is called inertial impaction. A large number of particles are stuck in inlet area and reduce the cyclone efficiency. However, if the cyclone inlet has an angle, the number of these particles is reduced. Table (2) and (3) show the information of the injected particles along with their efficiency at two different velocities as well as different inlet angles. It is observed that the efficiency of the cyclone increased on average with increasing these two parameters and pressure drop decreased with increasing the inlet angle.

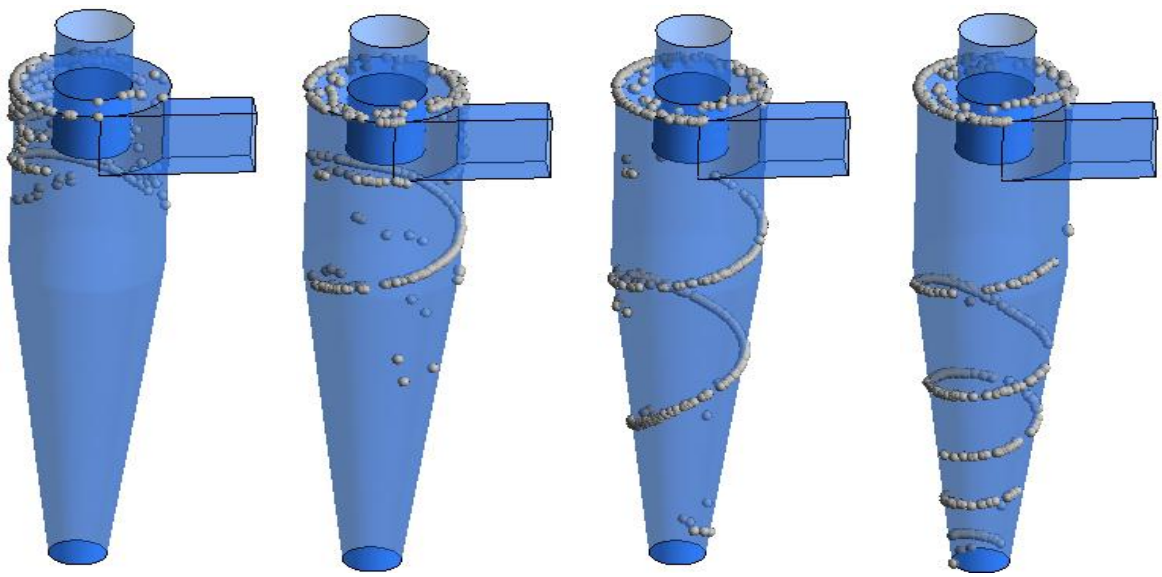

1 2 3 4

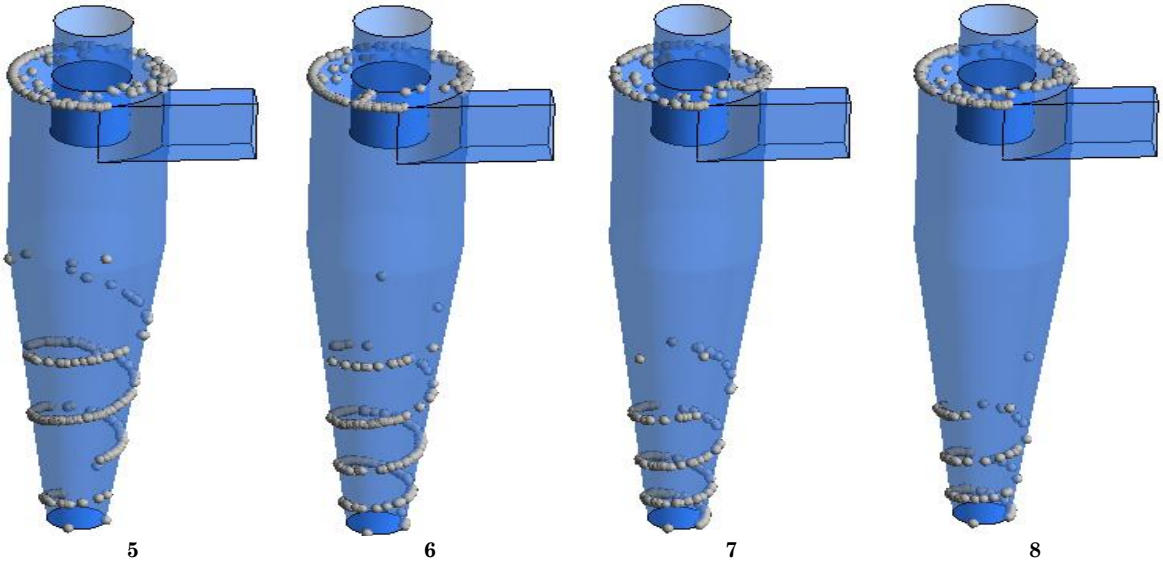

Figure 10. Particles trajectoriesat different time interval (inlet angel= 0 degree)

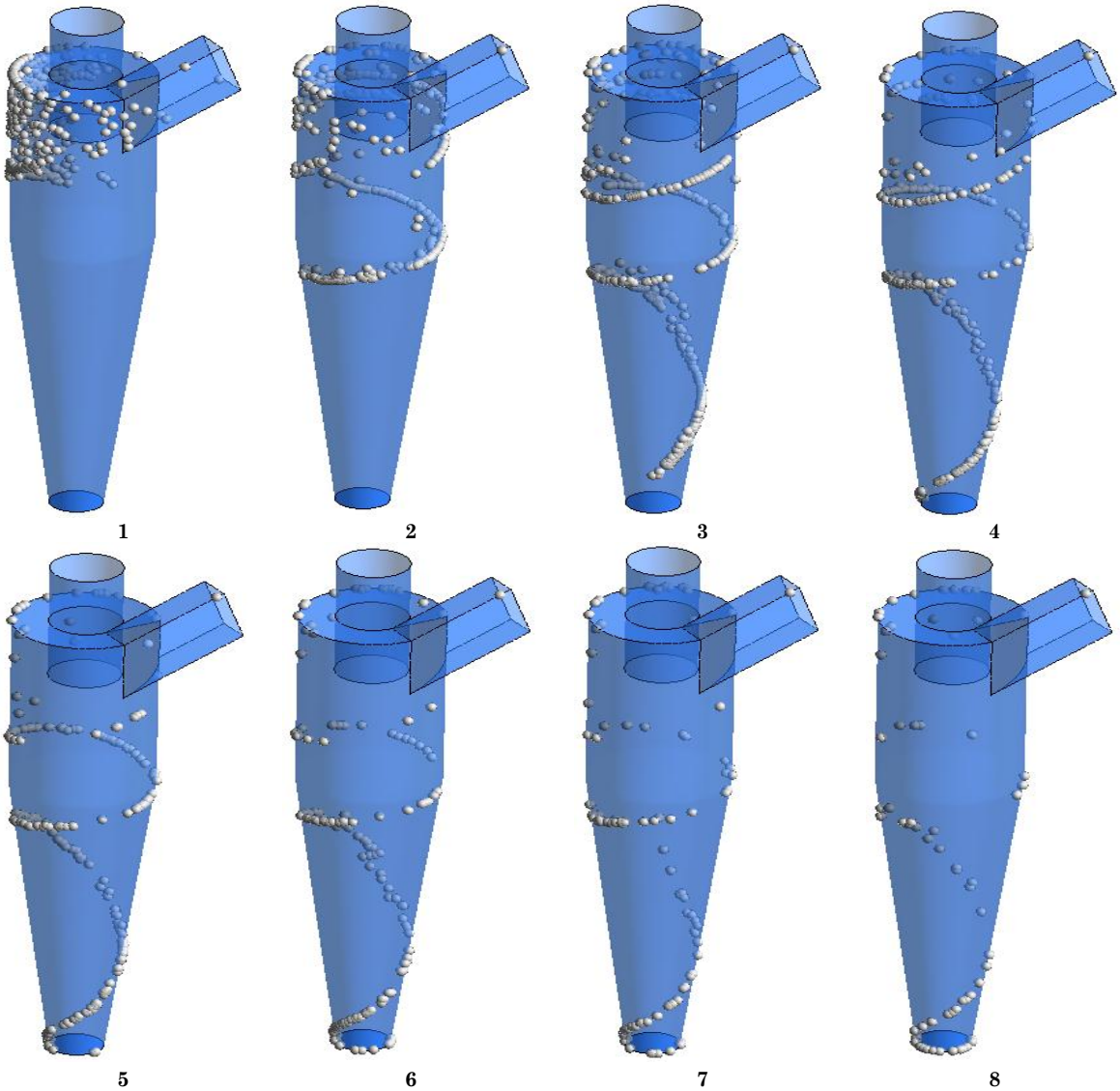

Figure 11. Particles trajectories at different time interval (inlet angel= 20 degree)

Table 2. Injected particles and collection efficiency at inlet velocity of 8.8m/s

Inlet angel	Number of injected particles	Number of trapped particles	Number of rest particles	Collection efficiency (%)	Pressure Drop (Pa)
0	1452	1092	360	75	159.5
10	1452	1363	89	93	140.8
20	1452	1428	24	98	126.9

Table 3. Injected particles and collection efficiency at inlet velocity of 16m/s

Inlet angel	Number of injected particles	Number of trapped particles	Number of rest particles	Collection efficiency (%)	Pressure Drop (Pa)
0	1452	1032	420	71	602.8
10	1452	1407	45	96	539.8
20	1452	1446	6	99	485.0

3.2. The Effect of Cone Angle and Particle Size

First, the effect of cone angle was investigated through changing the diameter of the cyclone bottom outlet. To do this, three different ratios of this diameter to the cyclone inlet length ($\frac{d_o}{L_i}$) 0.3, 0.4 and 0.5was studied. The cyclone height was 124 mm.

In general, total pressure drop in cyclones is defined as the difference between the average inlet and outlet values. In fact, this is one of the most important factors in the industry in choosing cyclone for a particular application. The reason for this is the imposition of a specific range of pressure drop for cyclone upstream set performance [17]. The static pressure diagram for cyclones with different diameters is shown in Figure 12.

As it is seen, the pressure field was symmetric inside the cyclone and a low-pressure region in the cyclone center was created due to the high rotating velocity. The results show that by decreasing the cone angle (due to reduction in small diameter), the static pressure increases. This will result in gas being drawn from the outer region of the vortex into the inner side, thereby reducing the acceleration of the fluid in this area.

The pressure drop due to the relative increase of the small diameter (angle decrease) in the contours presented in Figure 13 was significant. As can be seen, with the increase of small diameter, the static pressure decreased. Also, the pressure in the central region of the cyclone was less than the other parts due to its high rotational velocity. On the other hand, axial velocity of the continuous phase is one of the important factors in the transfer of solid particles to the particle separator section [23]. According to Figure 14, the velocity profile is of an inverted W and is almost the same for all cyclones. As a result, the average remaining time for all particles will be approximately the same. Velocity was negative in the cyclone body, which indicates the gas flow to the bottom. Moreover, the positive velocity in the center of the cyclone indicates upwards direction of the gas flow. An important point in this figure is the absence of symmetry in the axial velocity graph, so that the velocity on one side of the cyclone experiences a different maximum value than the other side. Although this difference is not quantitatively significant, it qualitatively presents the asymmetrical nature of the current process. This asymmetry was more significant in a smaller diameter than a large diameter.

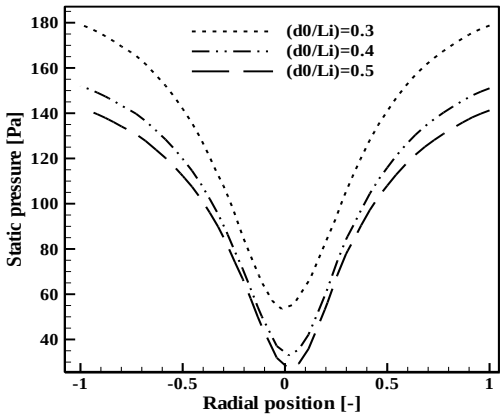

Figure 12. The effect of bottom outlet diameter on the static pressure inside the cyclone (x=0and z=0.05425)

Figure 15 shows the variation of the axial velocity for three different diameters of the cyclone bottom outlet. As mentioned before, tangential velocity is an effective factor in separating solid suspended particles due to centrifugal force. Therefore, increasing tangential velocity causes the increaes of the separation efficiency and determines the tangential velocity of the factors influencing the cyclone performance [24].

As shown in Figure 16, the tangential velocity profile in the central region of the cyclone (the region of forced vortices) is similar in cyclones of different diameters and there is

not much difference. However, this difference increases in areas close to the wall (open vortices) and the tangential velocity decreases with the increase of cone small diameter.

The cut diameter is defined as the diameter of a particle collected with 50% of collection efficiency. It is an indicator of the size range of particles that can be collected. On the other hand the Cyclone separator with smaller cut diameter can present better performance [7]. Figure 17 shows the separation efficiency diagram versus particle diameter for three different bottom-outlet diameters of the cyclone separator. The separation efficiency of the set increased with decrease in the diameter of the cone due to the increased centrifugal force and tangential velocity. Moreover, the separation efficiency of the cyclone increased by increasing the particle diameter. According to Table 4, it can be concluded that the cut diameter has higher values for larger diameters of the cyclone bottom outlet.

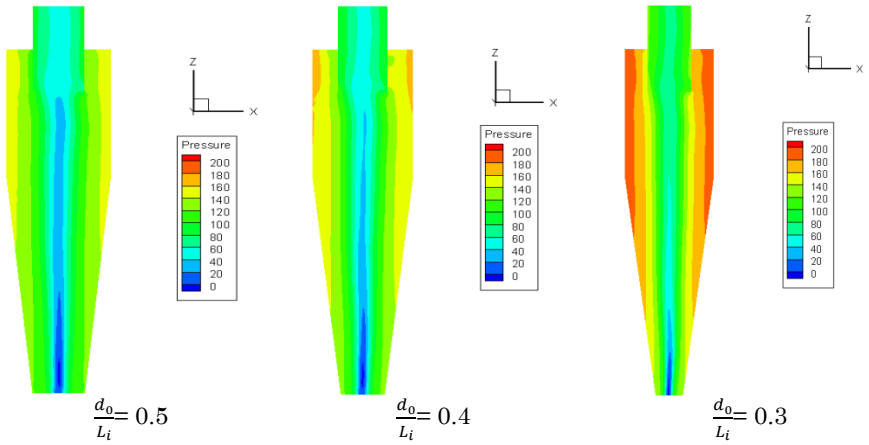

Figure 13. The contour of the static pressure for different small diameters of the cyclone bottom outlet (Y=0)

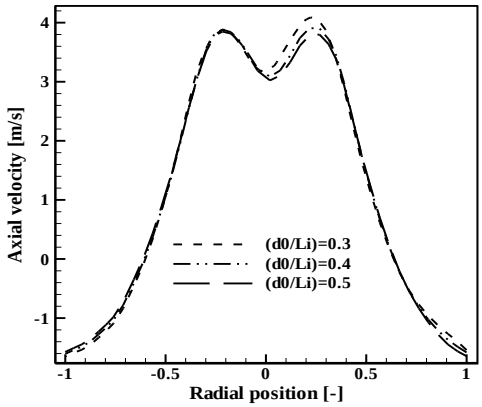

Figure 14. The effect of small diameters on axial velocity

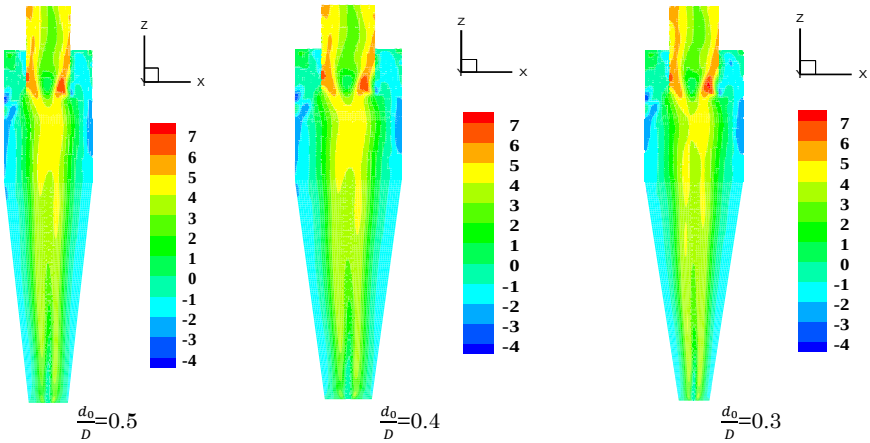

Figure 15. The contour of axial velocity in different small diameteres

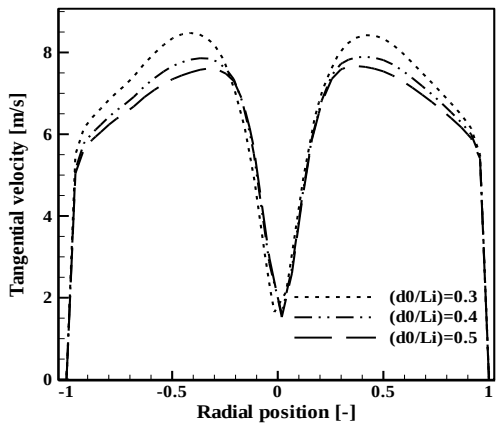

Figure 16. The effect of small diametere of cyclone on tangential velocity

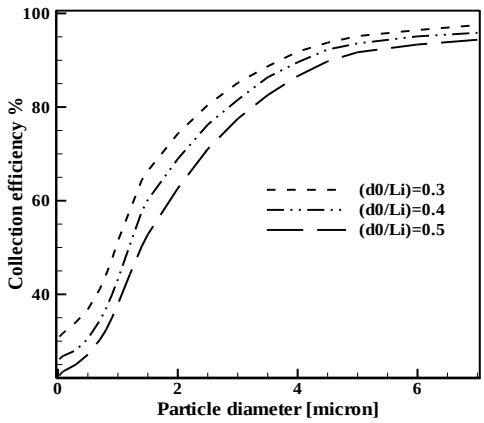

Figure 17. The effect of bottom-outletdiameterof cyclone on the collection efficiency (%).

Table 4. The effect of the bottom-outlet diameter of cyclone on the cut diameter

Bottom-outlet diameter d0/Li	0.2	0.3	0.4	0.5
The cut diameter (mm)	0.81	0.97	1.67	1.38

3.3. The Effect of the Height of the Cone

The effect of the height of the cone (H=104 mm (cyclone 1) and H=114 mm (cyclone 2)) investigated while keeping the diameter of the cyclone bottom outlet constant at 11.625 mm.

The static pressure diagram for cyclones with different heights is shown in Figure 18. The results show that increasing cyclone height reduced the rotation intensity and caused a significant reduction in the static pressure [7]. Furthermore, the pressure drop due to the height of the cone, the lower pressure zone of the cyclone, and the pressure field symmetry inside the cyclone can all be seen in Figure 19.

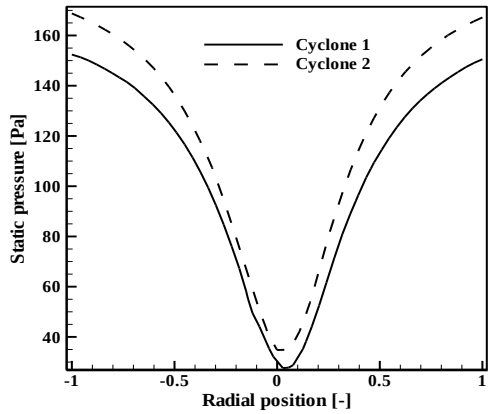

Figure 18. The effect of cyclone height on the static pressure inside the cyclone (x=0, z=0.05425).

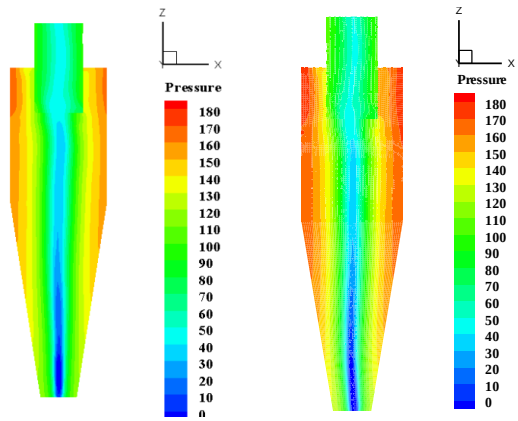

Cyclone 1 Cyclone 2

Figure 19. The contour of static pressure inside cyclone 1 and 2 (Y=0).

Figure 20 shows the axial velocity in cyclones with different heights. The axial velocity profile in both cyclones is almost the same. A negative axial velocity was observed due to the movement of gas downstream near the walls of the cyclone, while the axial velocity in the center of the cyclone is positive due to the gas moving upward.

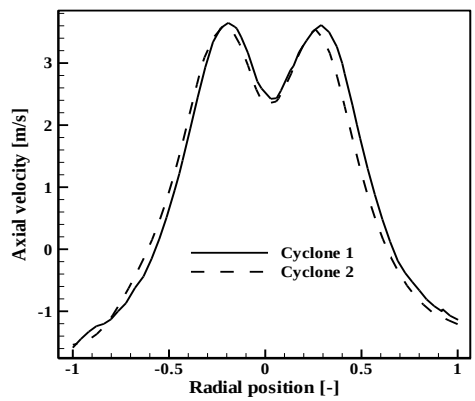

Figure 20. The effect of cyclone height on axial velocity (x=0, z=0.05425)

The tangential velocity decreased by increasing the height of the cyclone cone (Figure. 21). One of the reasons for the reduction intangential velocity is the reduction of the rotational intensity that occurs when the fluid enters the cyclone. In general, the tangential velocity at the center of the cyclone (upward movement of the fluid), in cyclones with different cone heights was approximately the same and the maximum tangential velocity occurred in the area near the wall (downward movement of the fluid).

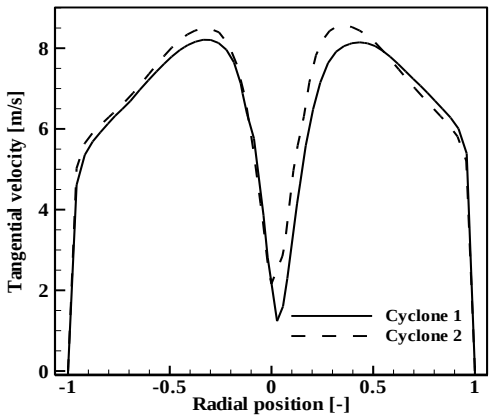

Figure 21. The effect of cyclone height on the tangential velocity (x=0 and z=0.05425).

The collection efficiency is shown in Figure 22 with respect to the particle diameter and the cut diameter values for the two cyclone separators with different heights. The separation efficiency decreased with increasing the height of the cyclone cone, because the tangential velocity and also the centrifugal force are decreased. Moreover, the cut diameter decreased as cone height decreased.

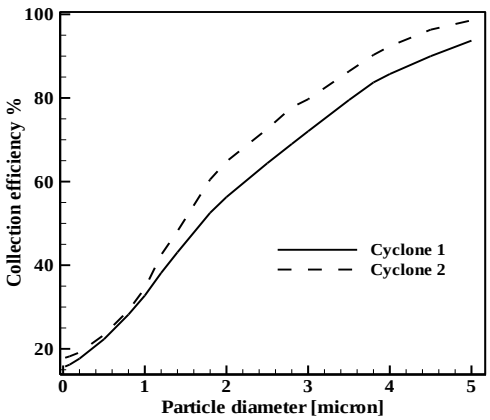

Figure 22. The effect of cyclone height on the collection efficiency.

Table 5. The effect of cyclone height on the cyclone cut diameter

Cyclone height (mm)	The cut diameter (micron)
104 (cyclone 1)	1.59
114 (cyclone 2)	1.37

4. Conclusion

In this paper, a parametric numerical study of cyclones was carried out. The effect of the influential parameters, such as inlet velocity and angle, small diameter of cone, cone height and cone angle on the performance and cyclone separation efficiency was investigated. The tangential velocity and pressure drop decreased as the inlet angle was increased, with the lowest pressure drop at an angle of 20 degrees. However, the pressure drop increased with the increase of fluid velocity. Furthermore, increasing the inlet velocity (with the exception of a zero angle) enhanced the cyclone efficiency. Reducing the cone angle via using a cyclone with smaller bottom outlet increased the static pressure, but the axial velocity profile remained the same for all cyclones. Moreover, the tangential velocity profile in the central region of the cyclone was almost the same in all cyclones, while in the area near the wall, the tangential velocity increased. The results further showed that in cyclones with higher cone height, the static pressure was significantly reduced and the axial velocities in both cyclones were approximately the same, but the separation efficiency decreased with increasing the height of the cyclone cone. At the end, it can conclude that this parametric study can have a great potential for design and fabrication of cyclones used in gas-solid separation industries.

References

Hoffmann, A., L. Stein, and P. Bradshaw (2003). Gas cyclones and swirl tubes: principles, design and operation. Applied Mechanics Reviews, 56, p. B28.

Hoffman, A.C., et al. (2002). Gas cyclones and swirl tubes, Vol. 56, Springer.

Demir, S., A. Karadeniz, and M. Aksel (2016). Effects of cylindrical and conical heights on pressure and velocity fields in cyclones. Powder Technology, 295, 209-217.

Song, C., et al. (2016). Numerical analysis of forces exerted on particles in cyclone separators. Powder Technology, 294, 437-448.

De Souza, F.J., R. de Vasconcelos Salvo, and D. de Moro Martins. (2015). Effects of the gas

outlet duct length and shape on the performance of cyclone separators, Separation and Purification Technology, 142, 90-100.

Duan, L., et al. (2015). Entropy generation analysis on cyclone separators with different exit pipe diameters and inlet dimensions, Chemical Engineering Science, 138, 622-633.

El-Batsh, H.M. (2013). Improving cyclone performance by proper selection of the exit pipe, Applied mathematical modelling, 37(7), 5286-5303.

Elsayed, K. and C. Lacor. (2011). The effect of cyclone inlet dimensions on the flow pattern and performance, Applied mathematical modelling, 35(4), 1952-1968.

Su, Y., A. Zheng, and B. Zhao (2011). Numerical simulation of effect of inlet configuration on square cyclone separator performance, Powder technology, 210 (3), 293-303.

Elsayed, K. and C. Lacor. (2012). The effect of the dust outlet geometry on the performance and hydrodynamics of gas cyclones, Computers & Fluids, 68, 134-147.

Elsayed, K. and C. Lacor. (2013). The effect of cyclone vortex finder dimensions on the flow pattern and performance using LES, Computers & Fluids, 71, 224-239.

Kaya, F., I. Karagoz, and A. Avci. (2011). Effects of surface roughness on the performance of tangential inlet cyclone separators, Aerosol science and technology, 45(8), 988-995.

Shukla, S.K., P. Shukla, and P. Ghosh. (2011). Evaluation of numerical schemes for dispersed phase modeling of cyclone separators, Engineering Applications of Computational Fluid Mechanics, 5(2), 235-246.

Elsayed, K. and C. Lacor. (2011). Numerical modeling of the flow field and performance in cyclones of different cone-tip diameters, Computers & Fluids, 51(1), 48-59.

Azadi, M., M. Azadi, and A. Mohebbi. (2010). A CFD study of the effect of cyclone size on its performance parameters, Journal of hazardous materials, 182(1-3), 835-841.

Qian, F. and Y. Wu. (2009). Effects of the inlet sectionangle on the separation performance of a cyclone, Chemical Engineering research and design, 87(12), 1567-1572.

Raoufi, A., et al. (2008). Numerical simulation and optimization of fluid flow in cyclone vortex finder, Chemical Engineering and Processing: Process Intensification, 47(1), 128-137.

Yoshida, H. (2013). Effect of apex cone shape and local fluid flow control method on fine particle classification of gas-cyclone, Chemical engineering science, 85,55-61.

Zhao, B., Y. Su, and J. Zhang. (2006). Simulation of gas flow pattern and separation efficiency in cyclone with conventional single and spiral double inlet configuration, Chemical Engineering Research and Design, 84(12), 1158-1165.

Jiao, J., et al. (2008). Experimental and numerical investigations of a dynamic cyclone with a rotary impeller, Chemical Engineering and Processing: Process Intensification, 47(9-10), 1861-1866.

Kim, H., K. Lee, and M. Kuhlman. (2001). Exploratory design modifications for enhancing cyclone performance, Journal of aerosol science, 32(10), 1135-1146.

F. Parvaz, S.H. Hosseini, G. Ahmadi, Kh. Elsayed. (2017). Impacts of the vortex finder eccentricity on the flow pattern and performance of a gas cyclone, Sep. Purif. Techno. 187, 1–13.

Geydt, P., M.S. Dunaevskiy, and E. Lähderanta. (2017). Opportunities of Scanning Probe Microscopy for Electrical, Mechanical and Electromechanical Research of Semiconductor Nanowires, in Nanowires-New Insights., InTech.

Brar ,L. and R. Sharma. (2015). Effect of varying diameter on the performance ofindustrial scale gas cyclone dust separators, Materials Today: Proceedings, 2(4-5), 3230-3237

S.A. Morsi, A.J. Alexander, (1972). An investigation of particle trajectories in two-phase flow systems, J. Fluid Mech. 55 193–208.